Section 2: BAG HOUSING & ELEMENTS

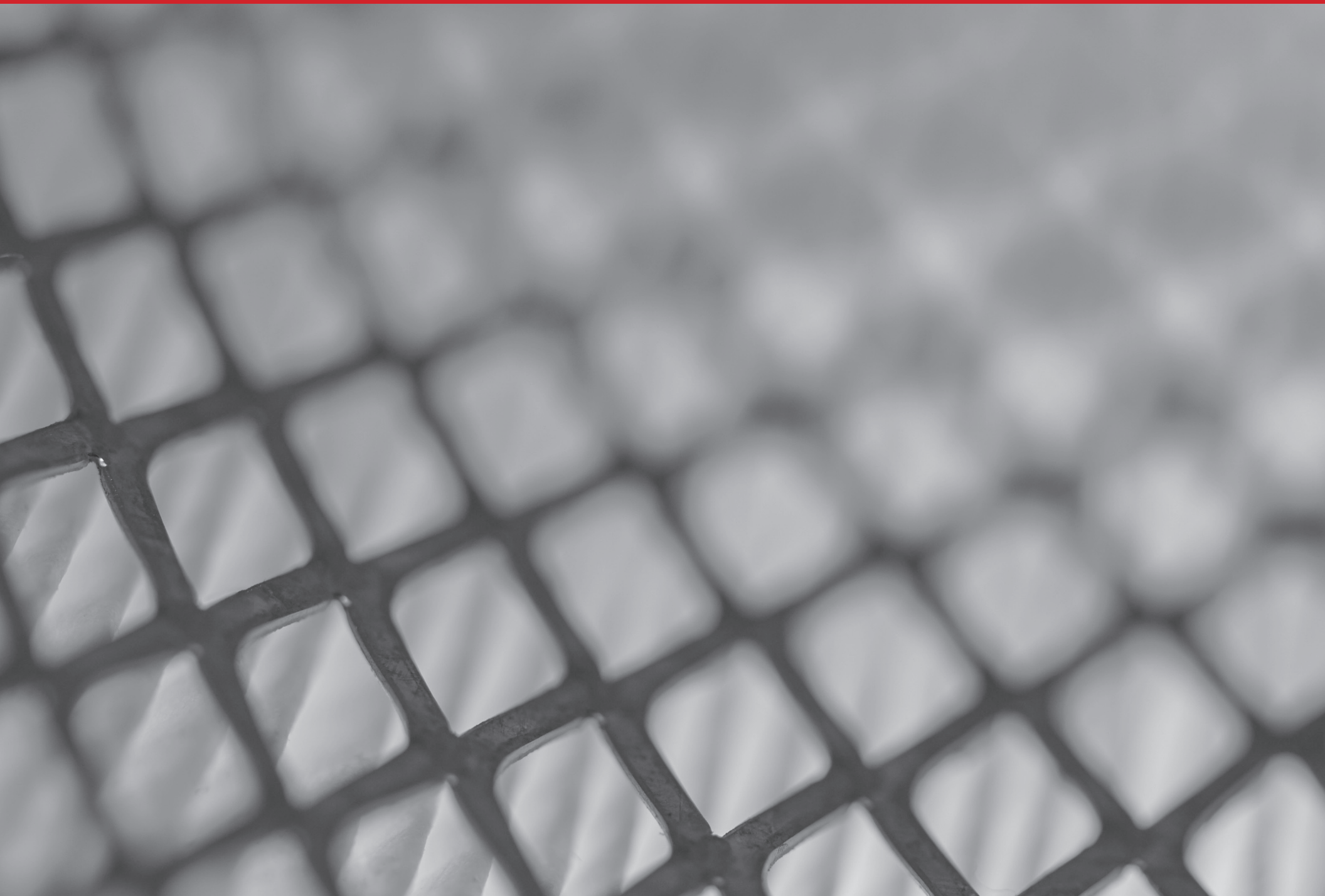

Bag Housings and Elements

Bag Housing

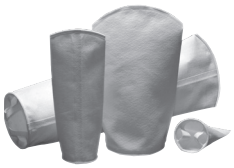

Welded Bags

Schroeder Process Filtration offers a complete line of bag elements and housings to fit a wide variety of applications. From single bag housings, to high flow multiple bag housings, Schroeder has an economical filtration solution to fit nearly any application.

The disposable bag elements offered by Schroeder Process Filtration come in a wide variety of materials, sizes and styles. Bag styles include: steel ring bags (stainless steel optional) that are sewn into top of bag, and plastic flange bags that have flange sewn at top of bag and draw string. A multitude of options are available - call factory for details. Polyester and polypropylene felt can be used for filtration as low as 1 micron while monofilament and multifilament bags can be used for more coarse filtration. Felt bags are either singed or glazed to prevent fiber migration on the clean side of the filter.

Our bags are made in standard industry sizes from 1 through 12. We also have commercial size bags available with a snap band support ring. The seams on the bags are either sewn or welded depending upon the systems requirements. Welded bags offer:

- No needle holes
- No thread migration
- Strong, even sealing of the material

Schroeder Process Filtration bag housings can handle flows as low as 20 gpm and as high as several thousand gpm. Single bag housings are rated for either 100 psi service or 150 psi. All of our multiple bag housings and duplex bag housings are rated at 150 psi. Multiple bag housings are manufactured to hold 2 bags to 10 bags and more. Housings are made from either carbon steel or electro-polished stainless steel. ASME section VII U-stamped housings are available upon request.

Schroeder Industries has long been known for innovation to meet customer needs. Contact the factory if you have an application that requires special consideration and designs. Multiple housings can be skid mounted with integrated valves, sensors and controls to meet your specific needs.

Our bag systems provide efficient and economical filtration. Some advantages to bag filtration are:

- Positive seal to assure zero fluid bypass
- Quick and easy installation
- Handles provide easy removal from housings
- High dirt holding capacity
- Sturdy construction to prevent bags from failing in operation
- 100% incinerable

Bag Housings and Elements

Typical Products Filtered

- Abrasives
- Adhesives
- Aerosol Products
- Chemicals
- Cleaning Fluids
- Coolants
- Cutting Fluids
- Detergents
- Dyestuffs
- Fabric Coatings
- Food Products
- Industrial Coatings
- Juices
- Lacquers
- Latices
- Liquids of all types
- Paints
- Paper Coatings
- Petroleum Products
- Pigments
- Pharmaceuticals
- Plasticizers
- Plastisols
- Printing Inks
- Process Water
- Polymer Solutions
- Roller Coatings
- Textile Chemicals
- Vegetable Oils
- Vinegar
- Waxes
- And Many Other Products

CHEMICAL PROCESSING | INDUSTRIAL | MACHINE TOOL | MINING TECHNOLOGY | POWER GENERATION | PULP & PAPER | STEEL MAKING | WASTE WATER TREATMENT

BH1 Single Bag Housings - 100 psi

100 psi
7 bar

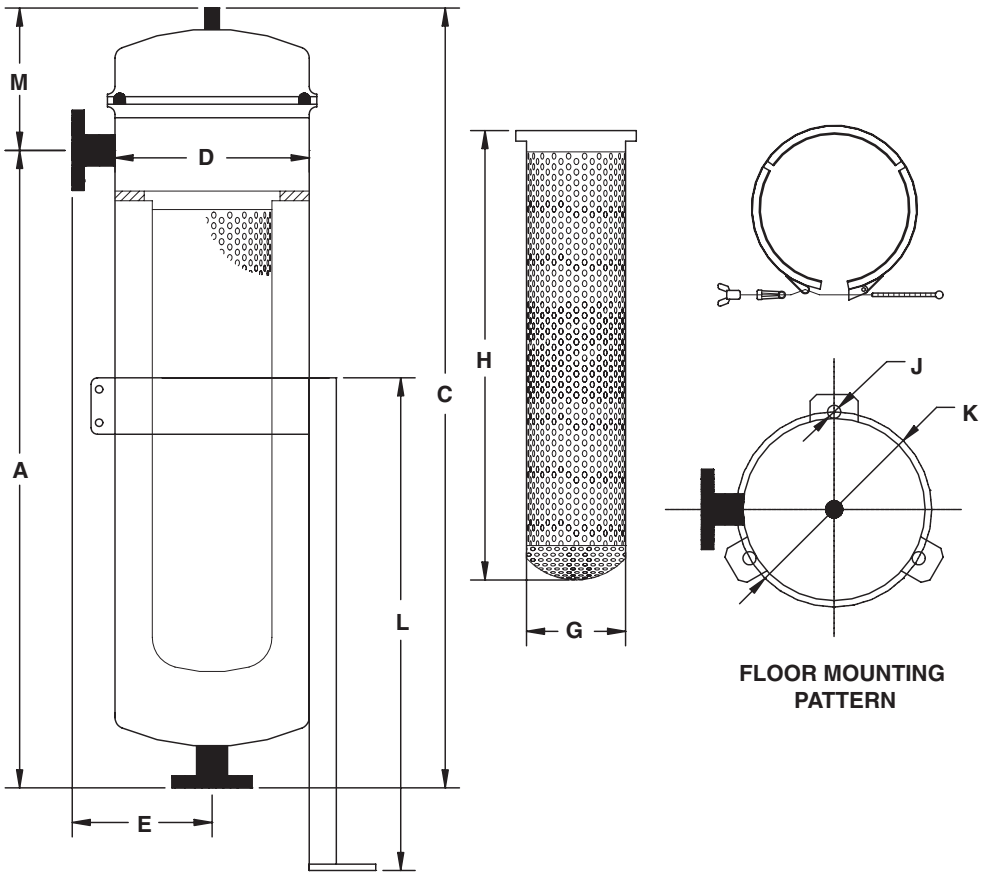

NOTE:
Drawings may change without notice. Contact factory for certified drawings.

Dimensions BH1 100 psi

Model	Bag Size	A inches (mm)	C inches (mm)	D ø inches (mm)	E inches (mm)	G ø inches (mm)	H inches (mm)	J ø inches (mm)	K ø inches (mm)	L inches (mm)	M inches (mm)
BH1	1	21.65 (550)	29.13 (740)	9.13 (232)	6.93 (176)	6.77 (172)	13.78 (350)	0.39 (10)	12.72 (323)	20.47 (520)	7.48 (190)
BH1	2	39.56 (1050)	47.04 (1195)	9.13 (232)	6.93 (176)	6.77 (172)	28.74 (730)	0.39 (10)	12.72 (323)	20.47 (520)	7.48 (190)
BH1	3	14.17 (360)	21.18 (538)	7.08 (180)	5.90 (150)	3.86 (98)	7.87 (200)	0.39 (10)	9.92 (252)	13.78 (350)	7.00 (178)
BH1	4	19.48 (495)	26.49 (673)	7.08 (180)	5.90 (150)	3.86 (98)	12.20 (310)	0.39 (10)	9.92 (252)	13.78 (350)	7.00 (178)

Specifications

Max. Working Pressure:	100 psi (7 bar)			
Max. Working Temperature:	167°F (75°C)			
Support Leg:	Adjustable			
Lid Closure:	Threaded Clamp			
	BH1 - 1	BH1 - 2	BH1 - 3	BH1 - 4
Max. Flow:	90 gpm (333 L/min)	200 gpm (750 L/min)	20 gpm (75 L/min)	45 gpm (167 L/min)
Housing Volume:	7.13 gal (27 L)	12.15 gal (46L)	2.90 gal (11 L)	3.70 gal (14 L)
Empty Weight:	46 lbs. (21 kg)	57 lbs. (26 kg)	31 lbs. (14 kg)	33 lbs. (15 kg)

Single Bag Housings -150 psi

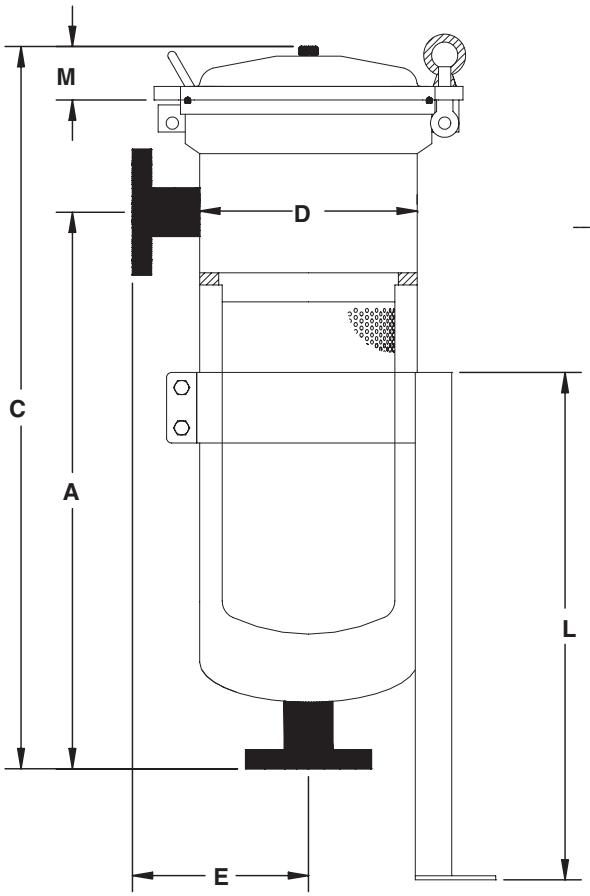

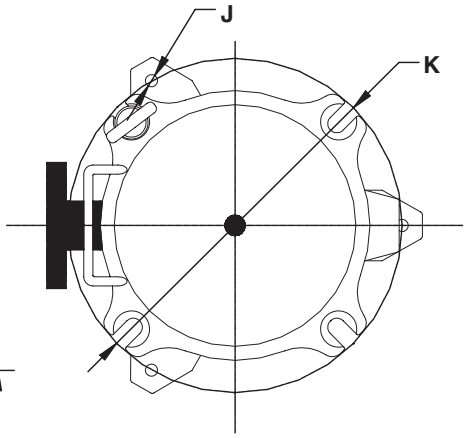

FLOOR MOUNTING PATTERN

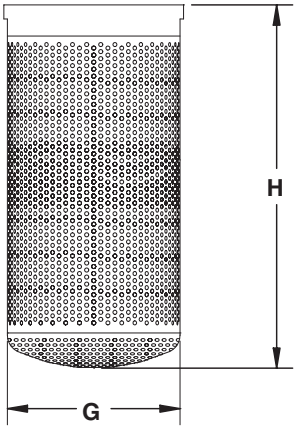

NOTE:
Drawings may change without notice. Contact factory for certified drawings.

Dimensions BH1 150 psi

Model	Bag Size	A inches (mm)	C inches (mm)	D ø inches (mm)	E inches (mm)	G ø inches (mm)	H inches (mm)	J ø inches (mm)	K ø inches (mm)	L inches (mm)	M inches (mm)
BH1	1	21.65 (550)	29.13 (740)	8.50 (216)	6.61 (168)	6.77 (172)	13.78 (350)	0.39 (10)	13.07 (332)	19.84 (504)	2.56 (65)
BH1	2	36.61 (930)	44.09 (1120)	8.50 (216)	6.61 (168)	6.77 (172)	28.74 (730)	0.39 (10)	13.07 (332)	22.72 (704)	2.56 (65)
BH1	3	13.78 (350)	19.49 (495)	5.51 (140)	5.32 (135)	3.82 (97)	7.87 (200)	0.39 (10)	8.31 (211)	13.78 (350)	1.58 (40)
BH1	4	17.72 (450)	23.43 (595)	5.51 (140)	5.32 (135)	3.82 (97)	12.20 (310)	0.39 (10)	8.31 (211)	13.78 (350)	1.58 (40)

Specifications

Max. Working Pressure:	150 psi (10 bar)			
Max. Working Temperature:	167°F (75°C)			
Support Leg:	Adjustable			
Lid Closure:	Swing Bolts			
	BH1 - 1	BH1 - 2	BH1 - 3	BH1 - 4
Max. Flow:	90 gpm (333 L/min)	200 gpm (750 L/min)	20 gpm (75 L/min)	45 gpm (167 L/min)
Housing Volume:	6.07 gal (23 L)	9.77 gal (37 L)	1.66 gal (6.3 L)	2.06 gal (7.8 L)
Empty Weight:	75 lbs. (34 kg)	95 lbs. (43 kg)	40 lbs. (18 kg)	46 lbs. (21 kg)

Single Bag Housings -100 & 150 psi

Filter Model Number Selection

How to Build a Valid Model Number for a Single Bag Housing, 100 & 150 psi:

BOX 1	BOX 2	BOX 3	BOX 4	BOX 5	BOX 6	BOX 7
BH						

Example: NOTE: One option per box

BOX 1	BOX 2	BOX 3	BOX 4	BOX 5	BOX 6	BOX 7	
BH	1	2	304S	2N	E	0	= BH12304S2NE0

BOX 1

Filter Series
BH

BOX 2

# of Bags
1

BOX 3

Bag Size
1 = Size 1
2 = Size 2
3 = Size 3
4 = Size 4

BOX 4

Material
304S = 304 Stainless Steel
316S = 316 Stainless Steel
316L = 316L Stainless Steel

BOX 5

Connection
1N = 1" NPT
15 = 1.5" NPT
2N = 2" NPT
2F = 2" Flange
25 = 2.5" NPT
25F = 2.5" Flange
3N = 3" NPT
3F = 3" Flange
4N = 4" NPT
4F = 4" Flange

BOX 6

Seal Material
E = EPDM
S = Silicone
V = Viton
W = Teflon Encapsulated Viton

BOX 7

Pressure Rating
0 = 100 psi
1 = 150 psi

Multi Bag Housings BH1 - BH14

296-1981 gpm
1500-7500 L/min

150 psi
10 bar

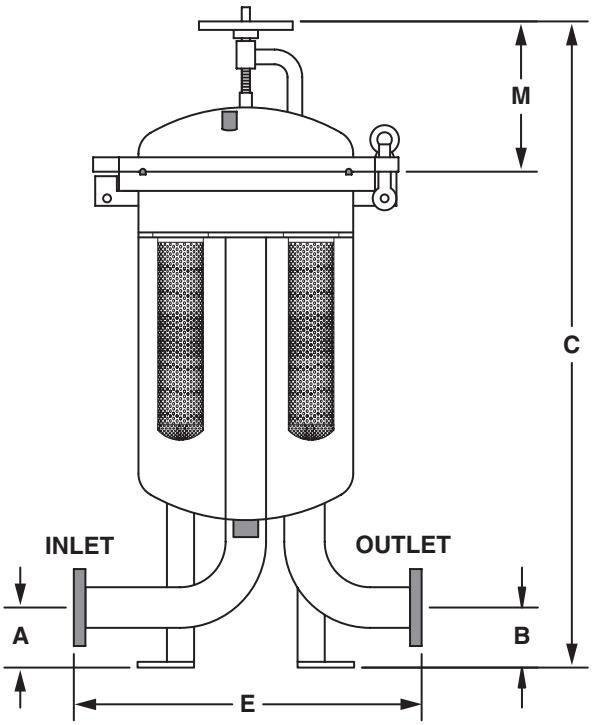

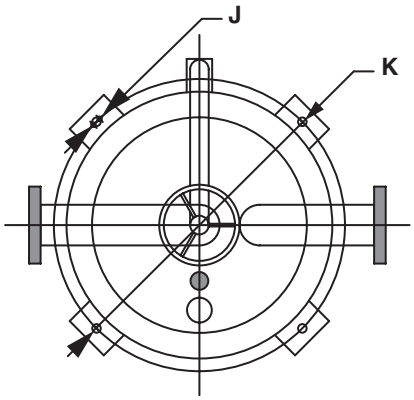

FLOOR MOUNTING PATTERN

NOTE:
Drawings may change without notice. Contact factory for certified drawings.

Multiple Bag Housing Dimensions

Number of Bags	Available Porting (Flange)	A		B		C		E		øJ		øK		M	
		Inches	mm	Inches	mm	Inches	mm	Inches	mm	Inches	mm	Inches	mm	Inches	mm
2	3"	4.25	108	4.25	108	56.02	1423	22.99	584	0.55	14	20.31	516	14.57	370
	4"	5.00	127	5.00	127	58.35	1482	25.98	660	0.55	14	20.31	516	14.57	370
3	3"	4.25	108	4.25	108	58.46	1485	27.01	686	0.55	14	24.33	618	16.02	407
	4"	5.00	127	5.00	127	60.79	1544	28.50	724	0.55	14	24.33	618	16.02	407
4	3"	4.25	108	4.25	108	58.78	1493	27.48	698	0.55	14	27.72	704	16.14	410
	4"	5.00	127	5.00	127	61.10	1552	29.02	737	0.55	14	27.72	704	16.14	410
	6"	5.98	152	5.98	152	65.43	1662	34.49	876	0.55	14	29.29	744	16.34	415
6	3"	4.25	108	4.25	108	59.17	1503	28.50	724	0.55	14	29.29	744	16.34	415
	4"	5.00	127	5.00	127	61.50	1562	30.04	763	0.55	14	29.29	744	16.34	415
	6"	5.98	152	5.98	152	65.43	1662	34.49	876	0.55	14	29.29	744	16.34	415
8	4"	5.00	127	5.00	127	70.20	1783	34.02	864	0.55	14	37.87	962	23.27	591
	6"	5.98	152	5.98	152	72.52	1842	39.02	991	0.55	14	37.87	962	21.46	545
	8"	7.24	184	7.24	184	80.63	2048	41.22	1047	0.55	14	37.87	962	25.59	650
10	6"	5.98	152	5.98	152	79.21	2012	42.99	1092	0.55	14	41.89	1064	26.97	685
	8"	7.24	184	7.24	184	83.19	2113	42.01	1067	0.55	14	41.89	1064	26.97	685
	10"	8.50	216	8.50	216	89.25	2267	47.99	1219	0.55	14	47.83	1215	27.95	710

Specifications

Max. Working Pressure:	150 psi (10 bar)
Max. Working Temperature:	167°F (75°C)
Support Legs:	Fixed
Lid Closure:	Swing Bolts

Multi Bag Housings

Housing Flow and Volume

Number of Bags	Max Flow		Empty Weight		Housing Volume	
	GMP	L/Min	lbs	kg	Gallons	Liters
2	396	1500	214	97	30.64	116.00
	396	1500	225	102	30.91	117.00
3	594	2250	276	125	49.66	188.00
	594	2250	287	130	49.93	189.00
4	793	3000	355	161	64.46	244.00
	793	3000	373	169	64.72	245.00
	793	3000	454	206	73.70	279.00
6	991	3750	437	198	73.18	277.00
	1189	4500	445	202	73.44	278.00
	1189	4500	454	206	73.70	279.00
8	1387	5250	992	450	129.18	489.00
	1585	6000	992	450	129.71	491.00
	1585	6000	1014	460	130.24	493.00
10	1783	6750	1301	590	174.88	662.00
	1981	7500	1323	600	175.41	664.00
	1981	7500	1576	715	225.60	854.00

Filter Model Number Selection

How to Build a Valid Model Number for a Multi-Bag Housing, 150 psi:

BOX 1	BOX 2	BOX 3	BOX 4	BOX 5	BOX 6	BOX 7
BH						

Example: NOTE: One option per box

BOX 1	BOX 2	BOX 3	BOX 4	BOX 5	BOX 6	BOX 7	
BH	4	2	304S	4F	E	1	= BH42304S4FE1

BOX 1

Filter Series
BH

BOX 2

# of Bags
2
3
4
5
6
7
8
9
10
11
12
13
14

BOX 3

Bag Size
2 = Size 2

BOX 4

Material
304S = 304 Stainless Steel
316S = 316 Stainless Steel
316L = 316L Stainless Steel

BOX 5

Connection
3F = 3" Flange (2, 3, 4 and 6 bags)
4F = 4" Flange (2, 3, 4, 6 and 8 bags)
6F = 6" Flange (4, 6, 8, and 10 bags)
8F = 8" Flange (8 & 10 bags)
10F = 10" Flange (10 bags)

BOX 6

Seal Material
E = EPDM
S = Silicone
V = Viton
W = Teflon Encapsulated Viton

BOX

Pressure Rating
1 = 150 psi

Duplex Multi Bag Housings

DBH1 - DBH10

792-3962 gpm
3000-15,000 L/min

150 psi
10 bar

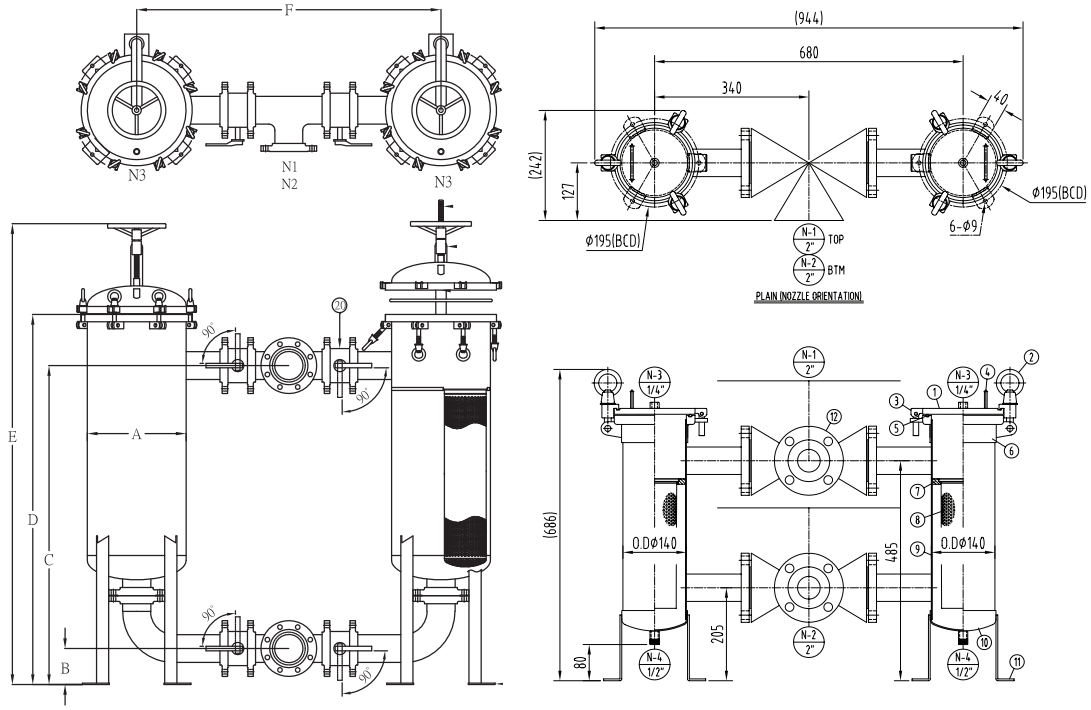

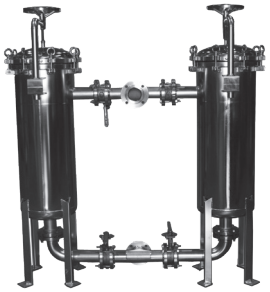

Dimensions

A Inches (mm)	B Inches (mm)	C Inches (mm)	D Inches (mm)	E Inches (mm)	F Inches (mm)	G Inches (mm)	N1	N2	N3
16 (406)	6 (148)	52 (1310)	60 (1520)	75 (1893)	49 (1250)	20 (516)	Inlet 3 / 150P SORF	Outlet 3 / 150P SORF	Vent .5 / PT F

Specifications

Max. Working Pressure:	150 psi (10 bar)
Max. Working Temperature:	167°F (75°C)
Support Legs:	Adjustable
Lid Closure:	Swing Bolts

Filter and Media are sold separately.
Additional sizes available - call factory for details.

Duplex Multi Bag Housings

How to Build a Valid Model Number for a Duplex Bag Housing, 150 psi:

BOX 1	BOX 2	BOX 3	BOX 4	BOX 5	BOX 6	BOX 7
DBH						

Example: NOTE: One option per box

BOX 1	BOX 2	BOX 3	BOX 4	BOX 5	BOX 6	BOX 7	
DBH	4	2	304S	4F	E	1	= DBH42304S3FE1

BOX 1

Filter Series
DBH

BOX 2

# of Bags
1
2
3
4
5
6
7
8
9
10

BOX 3

Bag Size
2 = Size 2

BOX 4

Material
304S = 304 Stainless Steel
316S = 316 Stainless Steel
316L = 316L Stainless Steel

BOX 5

Connection
3F = 3" Flange (2, 3, 4 and 6 bags)
4F = 4" Flange (2, 3, 4, 6 and 8 bags)
6F = 6" Flange (4, 6, 8, and 10 bags)
8F = 8" Flange (8 & 10 bags)
10F = 10" Flange (10 bags)

BOX 6

Seal Material
E = EPDM
S = Silicone
V = Viton
W = Teflon Encapsulated Viton

BOX

Pressure Rating
0 = 100 psi
1 = 150 psi

Filter and Media are sold separately.

Bag Element Operating Guidelines

Recommended change-out:

It is recommended that a liquid filter bag be changed out when the differential pressure (ΔP) between the upstream and downstream sides reaches 20 - 25 psi. Although this is a rule of thumb, some applications may require change-out at a ΔP well below 20 psi. Under no circumstances should ΔP be allowed to exceed 25 psi.

What is the product that needs to be filtered?

Obtain all the details of the liquid/solid composition. You need to confirm the chemical compatibility to ensure the proper material is used for the bag, retainer type and the housing for the filter bags.

What is the viscosity of the product to be filtered?

Use a flow rate chart to find out the optimum operating parameters.

What is the pH level in order to choose the proper material for the filtration system?

Is the product an acid with a pH of 1-7 or is it Alkaline 7-14?

What type of solids does the product contain?

Are the solids crystalline or gelatinous? Crystalline solids can form a permeable layer on the filter media and gelatinous solids can form an impermeable layer that will cause blinding off of the filter media.

What is the density of the solids?

What is the PPM (parts per million) of the solids?

What is the range of particle size? What size does the customer want to remove and at what efficiency?

The range of particulate size is important in determining which micron rating your filter media should be? Filter bags can be made with nominally rated material or with high efficiency material.

What is the flow rate of the product?

The flow rate is critical information required when determining the size and number of bags required.

Is it a continuous or batch process?

This is important in order to determine the filter bag consumption.

What is the operating pressure of the system?

At what minimum and maximum potential pressure is the system designed to run? What is the acceptable pressure required? Filter bag differential pressure capacity is 20-25 psi.

What is the temperature of the product being filtered?

Temperature has an impact on the viscosity, the filter media and the O-rings. The temperature can even affect the corrosion rate of the housing.

Sizes Available

				Bag/Collar/Style				Manufacturers					
Size	Sq. Ft.	Diameter (in.)	Length (in.)	S	SS	DS	P	FSI	AFF	GAF	Strainrite	Rosedale	Commercial
1	2.5	7.06	16.5	•	•	•	•	•	•	•	•	•	
2	5.0	7.06	32.0	•	•	•	•	•	•	•	•	•	
3	0.8	4.12	8.0	•	•	•	•	•				•	
4	1.3	4.12	14.0	•	•	•	•	•				•	
7	1.3	5.5	15.0	•	•	•						•	
8	2.0	5.5	21.0	•	•	•						•	
9	3.3	5.5	31.0	•	•	•						•	
C1	2.5	7.31	16.5			•							•
C2	5.0	7.31	32.5			•							•

Bag Elements

Filter Bag Pressure Drop PB

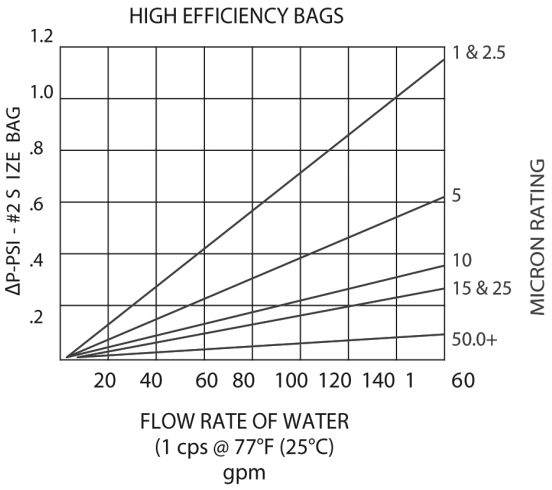

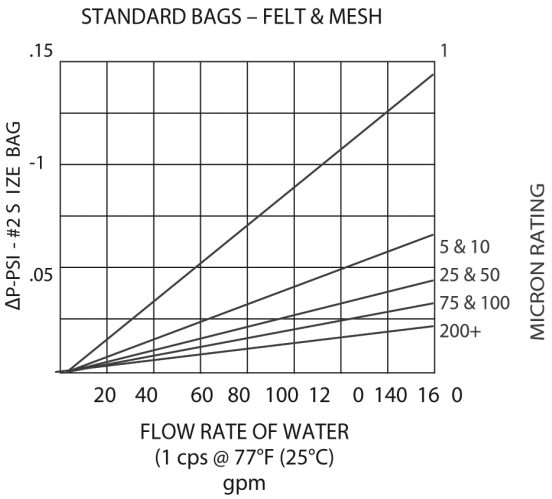

Step 1 The graphs show the ΔPB produced by a #2 size bag for water, 1 cps @ 77°F (25°C). The pressure drop is determined from the type of bag, the micron rating and flow rate.

Step 2 Correct for bag size from the table below if the size is different than #2 size.

Bag Size	Dia X Length	Multiply By
2	7.06 x 32	1.00
9	5.5 x 32	1.50
1	7.06 x 16	2.25
8	5.5 x 21	2.25
7	5.5 x 15	3.00
4	4.15 x 14	4.50
3	4.15 x 8	9.00

Step 3 If the viscosity of the liquid is greater than 1 cps (water @ 77°F (25°C)). Multiply the result from step 2 by the proper correction factor from the chart below.

Viscosity (cps)	Correction Factor
50	4.5
100	8.3
200	16.6
400	27.7
800	50.0
1000	56.2
1500	77.2
2000	113.6
4000	161.0
6000	250.0
8000	325.0
10000	430.0

The value obtained in step 3, ΔPB is the clean pressure drop caused by the filter bag.

SUMMARY

System Pressure Drop = ΔPS = ΔPH + ΔPB

For new applications, the ΔPS should be 2.0 psi (0.14 bar) or less. For high contaminant loading applications, this value should be as low as possible. The lower this value is, the more contaminant a bag will hold. For applications with nominal contaminants, this value can go to 3.0 psi (0.21 bar) or more. Consult factory for specific recommendations when the clean ΔP exceeds 2.0 psi (0.14 bar).

Micron-Rated Bag Elements

How to Build a Valid Model Number for a Micron-Rated Bag Element:

BOX 1	BOX 2	BOX 3	BOX 4	BOX 5	BOX 6

Example: NOTE: One option per box

BOX 1	BOX 2	BOX 3	BOX 4	BOX 5	BOX 6	
PEF	25	P	2	S	H	= PEF25P2SH

BOX 1

Bag Material

PEF =	Polyester Felt
PPF =	Polypropylene Felt
NOF =	Nomex Felt
PPM =	Polypropylene Monofilament Mesh
NMO =	Nylon Monofilament Mesh
PEM =	Polyester Multifilament Mesh
NMU =	Nylon Multifilament Mesh
TEF =	Teflon Felt

BOX 2

Micron Rating

See chart below for available micron ratings

BOX 3

Cover Material

P =	Plain, No Cover
SBP =	Spun Bonded Polyester
PEM =	Polyester
G =	Glazed
S =	Singed

BOX 4

Bag Size

Size	Diameter	Length (in)
1 =	7.06	16.5
2 =	7.06	32
3 =	4.12	8
4 =	4.12	14
7 =	5.5	15
8 =	5.5	21
9 =	5.5	31
11 =	8	16
12 =	8	30
C1 =	7.31	16.5
C2 =	7.31	32.5
X1 =	4.35	8
X2 =	4.35	14
XO1 =	6	22

BOX 5

Collar Type

S =	Standard Galvanized Steel Ring
SS =	Stainless Steel Ring
DS =	Draw String
P =	Plastic Flange
T =	Titanium
OSS =	OSS Flange
NR =	No Ring
F =	Custom

BOX 6

Options

0 =	No Options
H =	Handles (standard on all flange & ring style bag elements)
WE =	Welded Seams Only Available of PEF & PPF Bags with Plastic Flanges
EB =	Edge Binding
A =	Auto Seams
TTA =	Turn, top stitch, auto seam
RC =	Reverse Collar
SB =	Spun Bond Cover
MC =	Mesh Cover

Technical Information for Liquid Bag Elements

Construction	Fibers		1	3	5	10	15	25	50	75	100	125	150	175	200	250	300	400	600	800	1k
Felt	Polyester	PEF	•	•	•	•	•	•	•	•	•		•		•						
	Polypropylene	PPF	•	•	•	•		•	•		•		•								
	Nomex	NOF	•		•	•		•	•		•				•						
Monofilament	Polypropylene	PPM									•		•		•	•	•	•	•	•	
Mesh	Nylon	NMO			•	•		•	•	•	•	•	•	•	•	•	•	•	•	•	•
Multifilament	Polyester	PEM									•		•		•	•	•	•	•	•	•
Mesh	Nylon	NMU									•		•		•	•	•	•	•	•	•

Medias	Mineral Acids	Organic Acids	Alkalies	Oxidizing Acids	Animal Vegetable Perro-Oils	Organic Solvents	Miro Organisms	Temp. Limits (°F)
Polyester	Good	Good	Good	Good	Excellent	Excellent	Excellent	257°
Polypropylene	Good	Excellent	Good	Fair	Excellent	Good	Excellent	200°
Nomex	Fair	Fair	Good	Poor	Excellent	Excellent	Excellent	425°
Nylon	Poor	Fair	Good	Poor	Excellent	Excellent	Excellent	300°

Polyester Phenolic Treatment (PEPT) Liquid Filter Bag

The Polyester Phenolic Treatment (PEPT) design incorporates single or dual layers of fully infused Phenolic Resin treated Polyester Felt for optimum performance. The PEPT's non-compressible depth fibers are more effective than conventional filters in retaining gel-like particles. Inline cartridges, which accumulate debris on the outside of the element and are more prone to debris falling off during change out, PEPT's filter bags contain the contaminants securly inside the bag, making filter change-out much cleaner.

The proven gradient density of a dual layer of the PEPT bag coupled with the increased surface area results in enhanced efficiencies and increased filter life. This not only ensures the integrity of the filtration process, it builds an affective pre-filter cake that promotes higher efficiencies without high pressure drop or loss of flow capacity.

Features:

- Micron Ratings from 1 to 100
- Broad chemical compatibility
- Handles on all bags
- Choice of Steel Ring or Plastic Flange
- Excellent removal of gel-like particles
- Disc bottom for ease of installation and fit in basket

Polyester Phenolic Treatment Liquid Filter Bag

How to Build a Valid Model Number for an Absolute Rated (PPA) Bag Element:

BOX 1	BOX 2	BOX 3	BOX 4	BOX 5	BOX 6

Example: NOTE: One option per box

BOX 1	BOX 2	BOX 3	BOX 4	BOX 5	BOX 6	
PPT	SL	25	P2	SS	H	= PPTSL25P2SSH

BOX 1

Bag Material	
PPT =	Polyester Phenolic Treatment Rated

BOX 2

Layers	
SL =	Single Layer
DL =	Double Layer

BOX 3

Micron Rating	
1 =	1 Micron
3 =	3 Micron
5 =	5 Micron
10 =	10 Micron
15 =	15 Micron
20 =	20 Micron
25 =	25 Micron
50 =	50 Micron
75 =	75 Micron
100 =	100 Micron

BOX 4

Bag Size	
P1 =	7.06" x 14"
P2 =	7.06" x 28"

BOX 5

Collar Type	
S =	Galvanized Steel
SS =	Stainless Steel
T =	Titanium
P =	P Flange
F =	F Flange
OSS =	OSS Flange

BOX 6

Options	
H =	Handles (standard)

Oil Absorbing Bag Elements

Materials of Construction

Schroeder's Oil Absorbing Bag Filters (OAB) are a cost-effective solution for removing oil from water while simultaneously filtering as low as 1 micron. The high capacity bag filter is designed with different layers of micro-fibers that not only retain oil, but increase overall efficiency to 95% or greater on microns ranging from 1 to 50. The overall construction of this filter bag has 30 plus square feet of media and can retain 10 pounds or more of oil depending on the micron. These bags are offered in standard bag size 1 or 2.

Efficiency

- Food Processing
- Hydraulic Systems
- Gelatinous Contaminants
- Cutting Oil
- Vacuum Pump
- Parts Washing
- Engine Oil/Transmission Oil
- Natural Gas Sweetening
- Natural Gas Dehydration
- Lubrication Oil

Model Code

How to Build a Valid Model Number for an Oil Absorbing (OAB) Bag Element:

BOX 1	BOX 2	BOX 3	BOX 4	BOX 5
OAB				

Example: NOTE: One option per box

BOX 1	BOX 2	BOX 3	BOX 4	BOX 5	
OAB	2H	1	S	H	= OAB2H1SH

BOX 1

Bag Material
OAB

BOX 2

Micron Rating	
1H =	1m High Efficiency
2H =	2m High Efficiency
5H =	5m High Efficiency
10H =	10m High Efficiency
25H =	25m High Efficiency
50h =	50m High Efficiency

BOX 3

Bag Size
1
2

BOX 4

Collar Type	
S =	Galvanized Steel
OSS =	OSS Flange
F =	F Flange

BOX 5

Options	
H =	Handles (Standard)

High Efficiency Bag Elements

High efficiency bag elements are constructed of Polypropylene meltblown microfibers, allowing for very fine particles capture at high efficiencies. All high efficiency filter bags are over 90% efficient at their suggested micron rating. The bag construction makes this filter an easy to use, convenient, high performance alternative to filter cartridges. Maximum flow per bag is 60 gpm.

Materials of Construction

Product Number:	PPH1H	PPH3H	PPH5H	PPH10H	PPH25H
Dirt Holding Capacity grams of AC Test Dust Loaded to 35 psi at 12 gpm	74	150	160	175	195
Oil Holding Capacity grams of Mineral Oil at Saturation	528	657	690	726	798

Efficiency

Product Number	Suggested Application Rating	Efficiency
PPH1H	1.0 micron	93.00%
PPH2H	2.0 micron	94.00%
PPH5H	5 micron	94.00%
PPH10H	10 micron	94.00%
PPH25H	25 micron	97.00%
PPH50H	50 micron	97.00%

Model Code

How to Build a Valid Model Number for a High Efficiency (PPH) Bag Element:

BOX 1	BOX 2	BOX 3	BOX 4	BOX 5

Example: NOTE: One option per box

BOX 1	BOX 2	BOX 3	BOX 4	BOX 5	
PEH	5H	2	F	H	= PEH5H2FH

BOX 1

Bag Type	
PEH =	Polyester High Efficiency
PPH =	Polypropylene High Efficiency

BOX 2

Micron Rating	
1H =	1m High Efficiency
2H =	2m High Efficiency
5H =	5m High Efficiency
10H =	10m High Efficiency
25H =	25m High Efficiency
50h =	50m High Efficiency
	90

BOX 3

Bag Size
1
2

BOX 4

Collar Type	
S =	Galvanized Steel
F =	F Flange
OSS =	OSS Flage

BOX 5

Options
H = Handles (standard)

Absolute Rated Bag Elements

Materials of Construction

The Absolute Rated Bag Elements are constructed of polypropylene meltblown microfibers, allowing for very fine particles capture at high efficiencies. All Absolute Rated filter bags are over 97% efficient at their suggested micron rating. The bag construction makes this filter an easy to use, convenient, high performance alternative to filter cartridges. The filter contains over 30 sq. ft. of usable filter media. This compares with only 4.4 sq. ft. for most filter bags and only .65 sq. ft. for most cartridges. Maximum flow per bag is 40 gpm.

Product Number:	PPA3A	PPA5A	PPA13A	PPA32A
Dirt Holding Capacity grams of AC Test Dust Loaded to 35 psi at 12 gpm	225	275	525	625
Oil Holding Capacity grams of Mineral Oil at Saturation	1000	1250	2300	2500

Efficiency

PPH/PPA

Product Number	Suggested Application Rating	Efficiency
PPA1A	1.0 micron	97.00%
PPA2A	2.0 micron	97.00%
PPA3A	3.0 micron	97.00%
PPA5A	5.0 micron	97.00%
PPA13A	13.0 micron	97.00%
PPA32A	32.0 micron	97.00%

Model Code

How to Build a Valid Model Number for an Absolute Rated (PPA) Bag Element:

BOX 1	BOX 2	BOX 3	BOX 4	BOX 5	BOX 6

Example: NOTE: One option per box

BOX 1	BOX 2	BOX 3	BOX 4	BOX 5	BOX 6	
PPA	5A	P	2	SS	H	= PPA5AP2SSH

BOX 1

Bag Material	
PPA =	Polypropylene Absolute Rated

BOX 2

Micron Rating	
1A =	1m Absolute
2A =	2m Absolute
3A =	3m Absolute
5A =	5m Absolute
13A =	13m Absolute
32A =	32m Absolute
50A =	50m Absolute
75A =	75m Absolute
100A =	100m Absolute

BOX 3

Cover Material
P = Plain, No Cover

BOX 4

Bag Size
2

BOX 5

Collar Type	
SS =	Stainless Steel
PP =	Polypropylene
P =	P Flange
F =	F Flange
OSS =	OSS Flage

BOX 6

Options
H = Handles (standard)

Bag Type High Flow Filter Cartridges

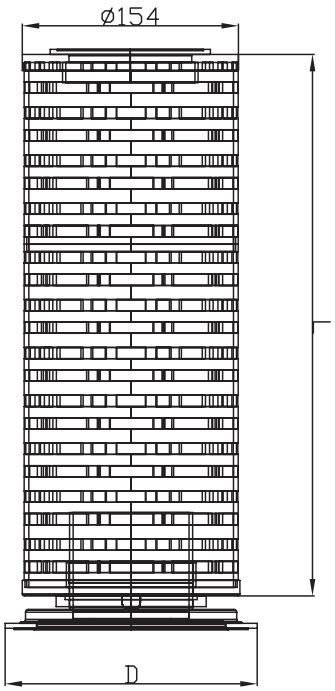

L:
16″=370
32″=634
D:
1# Flange =183mm
2# Flange =177mm

Description

Our Bag Type High Flow Filter Cartridges are made of pleated polypropylene depth media and are designed with inside-out flow direction which is correspondent with the bag filter. The cartridges satisfy processes requiring high purity and possess high flow rates and long service life. Innovative push-in flanges enable quick and convenient replacements into most commercial bag filter housings. With advantages of high flow rate and purity, fewer change outs and lower maintenance costs are required.

- Convertible into most commercial bag filter housings, providing cost-saving options without hardware change
- High surface area design provides high flow capacity and longer service life
- Innovative push-in flanges enable quick and convenient change outs
- Inside-out flow effectively traps contaminants inside the elements
- Manufactured by advanced thermal welding techniques, cartridges are free of binders and additives

Specifications

Media:	Polypropylene
Micron Rating:	1, 3, 5, 25 - 100 µm, 200 µm
Gasket/O-Ring:	EPDM, Viton®
Inside Diameter:	3.5" (90mm)
Outside Diameter:	7.25" (184mm)

Max. Operating Temperature:	160°F (70°C)
Max. Differential Pressure:	75 psi at 68°F (5.1 bar at 29°C) 35 psi at 130°F (2.4 bar at 54°C)
Recommended Change Out Differential Pressure:	35 psi at 130°F (2.4 bar at 54°C)

Bag Type High Flow Filter Cartridges

Filter Model Number Selection

How to Build a Valid Model Number for a Bag Type High Flow Filter Cartridge:

BOX 1	BOX 2	BOX 3	BOX 4	BOX 5	BOX 6	BOX 7
BR						

Example: NOTE: One option per box

BOX 1	BOX 2	BOX 3	BOX 4	BOX 5	BOX 6	BOX 7	
BR	SH	5	P	2	V	1	= BR-SH-5-P-2-V-1

BOX 1

Unit Type
BR = PP Fiber Pleated Filter Cartridge

BOX 2

Series
SH = Bag Type Series

BOX 3

Micron Rating
1 = 1 µm
3 = 3 µm
5 = 5 µm
25 = 25 µm
100 = 100 µm
200 = 200 µm

BOX 4

Filter Media
P = Polypropylene
GF = Glass Fiber

BOX 5

Nominal Length
1 = Size 1 Bag
2 = Size 2 Bag
40 = 40" Length

BOX 6

Gasket/O-Ring Option
E = EPDM
V = Viton®

BOX 7

Flange Type
1 = 183mm
2 = 177mm
N = None

Pressure Drop Information Based on Flow Rate and Viscosity

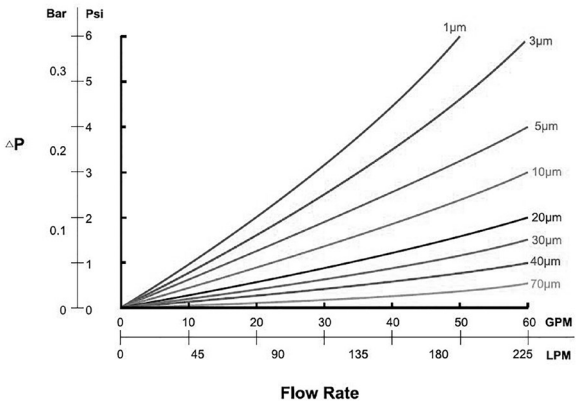

Operating Data

Schroeder FSI Pall Crossover

Product Family	Pall FSI Product	Schroeder Replacement xx = Micron Rating
Felt Filter Bags	PONG PENG	Standard Felt Filter Bags PPFxxG or PEFxxS
	POEX PEEX	Double layer felt bags PPFxxG or PEFxxS
	BHT	Standard Felt Liquid Bags NFO
Mesh Filter Bags	NMO	Standard Mesh Filter Bags NMO
	PEM	Standard Mesh Filter Bags PEM
	PMO	Standard Mesh FIlter Bags PPM
Microfiber Filter Bags	POMF	Call for Quote
Seamless Bags	BOS	Call for Quote
Cartridges	VOREX (CMMF)	DCE

Notes Section: